Prepared by: Zach Perkovich
04/10/2026

Pritchard Auto Company | 980 Highway 18 East Britt Iowa | 504238700

2027 E-350 Cutaway Chassis 176" WB DRW Base (E3F)

Price Level: 720 | Quote ID: 26AR301-

As Configured Vehicle

Code	Description	MSRP
Base Vehicle		
E3F	Base Vehicle Price (E3F)	$42,330.00
Packages		
780A	Order Code 780A *Includes:* *- Engine: 7.3L V8 Port Fuel Injected Gasoline* *- Transmission: 6-Speed O/D w/Tow Haul Includes auxiliary cooler.* *- GVWR: 12,500 Lb Payload Package* *- Tires: LT225/75R16E BSW A/S Hankook DynaPro HT.* *- Wheels: 16" X 6" White Painted Steel* *- Dual High Back Buckets* *- Vinyl Bucket Seats* *- Radio: AM/FM Stereo w/Clock Display & 2 Speakers Includes Bluetooth capability and USB input.*	N/C
Emissions		
425	50 State Emission System	STD
Powertrain		
99N	Engine: 7.3L V8 Port Fuel Injected Gasoline	Included
44P	Transmission: 6-Speed O/D w/Tow Haul *Includes auxiliary cooler.*	Included
X85	4.56 Axle Ratio	N/C
20C	GVWR: 12,500 Lb Payload Package	Included
Wheels & Tires		
T68	Tires: LT225/75R16E BSW A/S *Hankook DynaPro HT.*	Included
646	Wheels: 16" X 6" White Painted Steel	Included
Seats & Seat Trim		
211	Dual High Back Buckets	Included

Prices and content availability as shown are subject to change and should be treated as estimates only. Actual base vehicle, package and option pricing may vary from this estimate because of special local pricing, availability or pricing adjustments not reflected in the dealer's computer system. See salesperson for the most current information.

2027 E-350 Cutaway Chassis 176" WB DRW Base (E3F)

Price Level: 720 | Quote ID: 26AR301-

As Configured Vehicle (cont'd)

Code	Description	MSRP
A	Vinyl Bucket Seats	Included

Other Options

PAINT	Monotone Paint Application	STD
176WB	176" Wheelbase	STD
94A	Embedded Modem Delete This will be a forced option on all orders and builds from start of production. This option must be added to each order for the duration of the model year.	-$75.00
153	License Plate Bracket	N/C
54E	Manual Telescoping Trailer Tow Mirrors (54E) *Includes power-adjust flat lens.*	$230.00
525	Cruise Control	$240.00
903	Power Equipment Group *Includes 1-touch down power driver window.* *Includes:* *- Remote Keyless Entry* *- 110V Power Inverter* *- SecuriLock Passive Anti-Theft System (ePATS)*	$615.00
587	Radio: AM/FM Stereo w/Clock Display & 2 Speakers *Includes Bluetooth capability and USB input.*	Included
91F	SecuriLock Passive Anti-Theft System (ePATS)	Included
47Z	Ambulance Prep Package Not Required Required on orders not destined for ambulance use.	N/C

Fleet Options

FLADCR	Fleet Advertising Credit	$0.00
WARANT	Fleet Customer Powertrain Limited Warranty Requires valid FIN code.	N/C

Prices and content availability as shown are subject to change and should be treated as estimates only. Actual base vehicle, package and option pricing may vary from this estimate because of special local pricing, availability or pricing adjustments not reflected in the dealer's computer system. See salesperson for the most current information.

2027 E-350 Cutaway Chassis 176" WB DRW Base (E3F)

Price Level: 720 | Quote ID: 26AR301-

As Configured Vehicle (cont'd)

Code	Description	MSRP
	Ford is increasing the 5-year 60,000-mile limited powertrain warranty to 5-years, 100,000 miles. Only Fleet purchasers with a valid Fleet Identification Number (FIN code) will receive the extended warranty. When the sale is entered into the sales reporting system with a sales type fleet along with a valid FIN code, the warranty extension will automatically be added to the vehicle. The extension will stay with the vehicle even if it is subsequently sold to a non-fleet customer before the expiration. This extension applies to both gas and diesel powertrains. Dealers can check for the warranty extension on eligible fleet vehicles in OASIS. Please refer to the Warranty and Policy Manual section 3.13.00 Gas Engine Commercial Warranty. This change will also be reflected in the printed Warranty Guided distributed with the purchase of every new vehicle.	
Exterior Color		
YZ_01	Oxford White	N/C
Interior Color		
AE_01	Medium Flint w/Vinyl Bucket Seats	N/C
SUBTOTAL		$43,340.00
Destination Charge		$2,195.00
TOTAL		$45,535.00

Prices and content availability as shown are subject to change and should be treated as estimates only. Actual base vehicle, package and option pricing may vary from this estimate because of special local pricing, availability or pricing adjustments not reflected in the dealer's computer system. See salesperson for the most current information.

2027 E-350 Cutaway Chassis 176" WB DRW Base (E3F)

Price Level: 720 | Quote ID: 26AR301-

Available Options

Selected	Code	Description	MSRP
Packages			
☑	780A	Order Code 780A *Includes:* *- Engine: 7.3L V8 Port Fuel Injected Gasoline* *- Transmission: 6-Speed O/D w/Tow Haul Includes auxiliary cooler.* *- 4.10 Axle Ratio* *- GVWR: 12,500 Lb Payload Package* *- Tires: LT225/75R16E BSW A/S Hankook DynaPro HT.* *- Wheels: 16" X 6" White Painted Steel* *- Dual High Back Buckets* *- Vinyl Bucket Seats* *- Radio: AM/FM Stereo w/Clock Display & 2 Speakers Includes Bluetooth capability and USB input.*	N/C
Emissions			
☑	425	50 State Emission System	STD
Powertrain			
☑	99N	Engine: 7.3L V8 Port Fuel Injected Gasoline	STD
☑	44P	Transmission: 6-Speed O/D w/Tow Haul *Includes auxiliary cooler.*	STD
☐	X52	4.10 Axle Ratio	STD
☑	X85	4.56 Axle Ratio	N/C
☐	XE2	4.10 Axle Ratio w/Limited-Slip	$270.00
☐	XF5	4.56 Axle Ratio w/Limited-Slip	$270.00
☑	20C	GVWR: 12,500 Lb Payload Package	STD

Prices and content availability as shown are subject to change and should be treated as estimates only. Actual base vehicle, package and option pricing may vary from this estimate because of special local pricing, availability or pricing adjustments not reflected in the dealer's computer system. See salesperson for the most current information.

2027 E-350 Cutaway Chassis 176" WB DRW Base (E3F)

Price Level: 720 | Quote ID: 26AR301-

Available Options (cont'd)

Selected	Code	Description	MSRP
Wheels & Tires			
☑	T68	Tires: LT225/75R16E BSW A/S	STD
	Hankook DynaPro HT.		
☑	646	Wheels: 16" X 6" White Painted Steel	STD
☐	51A	Spare Tire & Wheel	$240.00
	Includes lug nut wrench and full-size matching tire. Wheel matches color of chassis wheel. This package does not include TPMS sensor for E-350 / E-450 Cutaway. *Includes:* *- 4 Ton Hydraulic Jack & Handle*		
Seats & Seat Trim			
☑	211	Dual High Back Buckets	STD
☐	21T	Captain's Chair Driver Side Only	$85.00
	Includes: *- Passenger Side Air Bag Delete*		
☐	21A	Dual High-Back Captain's Chairs	$390.00
☐	21W	Seats Not Included (Manual Pedestals)	N/C
	Includes 2-way adjuster. Provides manual pedestal, pretensioning restraint system and unique seat tracks for driver side only. Temporary driver seat provided.		
☐	21B	Passenger Seat Delete	-$350.00
	Deletes passenger seat and harness restraint system. *Includes:* *- Passenger Side Air Bag Delete*		
☐	21D	Manual Seat Prep Package	-$135.00
	Includes 2-way adjuster. Provides manual pedestal, pretensioning restraint system and unique seat tracks for driver side only. Temporary driver seat provided. *Includes:* *- Passenger Side Air Bag Delete*		
☑	A	Vinyl Bucket Seats	STD

Prices and content availability as shown are subject to change and should be treated as estimates only. Actual base vehicle, package and option pricing may vary from this estimate because of special local pricing, availability or pricing adjustments not reflected in the dealer's computer system. See salesperson for the most current information.

2027 E-350 Cutaway Chassis 176" WB DRW Base (E3F)

Price Level: 720 | Quote ID: 26AR301-

Available Options (cont'd)

Selected	Code	Description	MSRP
☐	C	Cloth Bucket Seats	N/C
☐	M	Cloth Captain's Chairs	N/C
☐	X	Seats Not Included	N/C

Other Options

☑	PAINT	Monotone Paint Application	STD
☑	176WB	176" Wheelbase	STD
☑	94A	Embedded Modem Delete	-$75.00

This will be a forced option on all orders and builds from start of production. This option must be added to each order for the duration of the model year.

☑	153	License Plate Bracket	N/C
☐	688	LH/RH Door Length Running Boards	$215.00
☐	60X	Right Hand Door Delete	-$200.00

Deletes right hand seat, seat belt system and hardware, passenger side air bag, passenger side A-pillar grab handle, passenger side sun visor, passenger side speaker, headliner and under-seat stowage.
Includes:
- Exterior Mirror Delete
- Passenger Seat Delete
Deletes passenger seat and harness restraint system.
- Passenger Side Air Bag Delete

☐	54F	Exterior Mirror Delete	STD
☑	54E	Manual Telescoping Trailer Tow Mirrors (54E)	$230.00

Includes power-adjust flat lens.

☐	625	Day/Night Interior Rearview Mirror	N/C

Prices and content availability as shown are subject to change and should be treated as estimates only. Actual base vehicle, package and option pricing may vary from this estimate because of special local pricing, availability or pricing adjustments not reflected in the dealer's computer system. See salesperson for the most current information.

2027 E-350 Cutaway Chassis 176" WB DRW Base (E3F)

Price Level: 720 | Quote ID: 26AR301-

Available Options (cont'd)

Selected	Code	Description	MSRP
☐	92B	B-Pillar Trim Kit *Includes unique, full LH/RH B-pillar trim shipped in dunnage box. May require trimming depending upon back-panel or upfit installed.*	$100.00
☑	525	Cruise Control	$240.00
☐	41H	Engine Block Heater *Single element. Recommended when minimum temperature is 10 degrees fahrenheit or below.*	$150.00
☑	903	Power Equipment Group *Includes 1-touch down power driver window.* *Includes:* *- Remote Keyless Entry* *- 110V Power Inverter* *- SecuriLock Passive Anti-Theft System (ePATS)*	$615.00
☐	87A	Tamper Proof Odometer	$30.00
☐	63O	240 Amp Alternator	$160.00
☐	63N	240 Amp/157 Amp Dual Alternator	$850.00
☑	587	Radio: AM/FM Stereo w/Clock Display & 2 Speakers *Includes Bluetooth capability and USB input.*	STD
☐	58B	Radio: 2-Speaker Prep Package (58B) *Includes in-dash USB plug/cable for aftermarket radio, larger hole and mounting brackets for a larger DIN-2 radio opening, antenna, speakers, grilles and wiring normally provided with single-CD radio packages.*	-$75.00
☐	58F	Radio: 2-Speaker Prep Package *Includes in-dash USB plug/cable for aftermarket radio, standard DIN-1 radio opening in the instrument panel, antenna, speaker grilles and wiring that are normally provided with single-CD radio packages.*	-$75.00
☐	58C	Radio: 4-Speaker Prep Package (58C) *Includes in-dash USB plug/cable for aftermarket radio, larger hole and mounting brackets for a larger DIN-2 radio opening, antenna, speakers, grilles and wiring normally provided with single-CD radio packages.* *Includes:* *- 4-Speaker Upgrade Package*	-$45.00

Prices and content availability as shown are subject to change and should be treated as estimates only. Actual base vehicle, package and option pricing may vary from this estimate because of special local pricing, availability or pricing adjustments not reflected in the dealer's computer system. See salesperson for the most current information.

2027 E-350 Cutaway Chassis 176" WB DRW Base (E3F)

Price Level: 720 | Quote ID: 26AR301-

Available Options (cont'd)

Selected	Code	Description	MSRP
		Includes 2 installed speakers and 2 boxed speakers.	
☐	58W	Radio: 4-Speaker Prep Package *Includes in-dash USB plug/cable for aftermarket radio, standard DIN-1 radio opening in the instrument panel, antenna, speaker grilles and wiring that are normally provided with single-CD radio packages.* *Includes:* *- 4-Speaker Upgrade Package* *Includes 2 installed speakers and 2 boxed speakers.*	-$45.00
☐	874	4-Speaker Upgrade Package *Includes 2 installed speakers and 2 boxed speakers.*	$30.00
☐	634	Dual 78 Amp-Hour Batteries	$245.00
☐	554	6 Alternate Lateral Frame Spacers *Includes:* *- Frame Pucks (Isolators)* *Includes 12 body mounts.*	$130.00
☐	559	Frame Pucks (Isolators) *Includes 12 body mounts.*	$85.00
☐	85E	Rear Frame Crossmember Delete	N/C
☐	557	4 Lateral/2 Long Standard Pattern Frame Spacers *Includes:* *- Frame Pucks (Isolators)* *Includes 12 body mounts.*	$140.00
☐	66A	Integration Module (Vehicle Integration System 1.0)	$310.00
☐	52S	User-Defined Switches *Includes 4 upfitter switches on the instrument panel.*	$85.00
☐	43D	Electronic Stability Control (ESC) Delete	-$110.00

For vehicle's ordered for stock, ESC delete (43D) is highly recommended.

Prices and content availability as shown are subject to change and should be treated as estimates only. Actual base vehicle, package and option pricing may vary from this estimate because of special local pricing, availability or pricing adjustments not reflected in the dealer's computer system. See salesperson for the most current information.

2027 E-350 Cutaway Chassis 176" WB DRW Base (E3F)

Price Level: 720 | Quote ID: 26AR301-

Available Options (cont'd)

Selected	Code	Description	MSRP
		ESC delete will also delete standard AEB.	
☐	53A	Automatic Emergency Braking (AEB) Delete *Standard ESC will remain.* *Includes:* *- Instrument Panel - Basic Message Center*	-$150.00
☐	62C	Passenger Airbag Cutoff Switch	$25.00
☐	43E	Rear View Camera Kit This kit is to be installed by the final stage manufacturer (upfitter). *Includes camera and large rear view video display that utilizes most of the mirror area.*	$690.00
☑	91F	SecuriLock Passive Anti-Theft System (ePATS)	$75.00
☐	17A	Back-Up Alarm - Electric, 102 dBA	$125.00
☐	526	Driver's Safety Package *Includes:* *- Distance Alert & Distance Indication* *- Post-Collision Braking* *- Adaptive Cruise Control* *- Lane Departure Warning* *- Driver Alert System* *- Auto High-Beam Headlamps*	$790.00
☐	68B	VIN Stamping on Catalytic Converter Housing *Theft-deterrent measure, full vehicle VIN stamped on catalytic converter housing, specific to individual vehicles.*	$45.00
☐	57L	Auxiliary Heater/AC Connector Package *Does not include rear air conditioning controls. Includes front heater connector and front air conditioning connector.* *Note: This package is intended to provide necessary hardware for body builders to install own auxiliary system.*	$135.00
☑	47Z	Ambulance Prep Package Not Required	N/C

Prices and content availability as shown are subject to change and should be treated as estimates only. Actual base vehicle, package and option pricing may vary from this estimate because of special local pricing, availability or pricing adjustments not reflected in the dealer's computer system. See salesperson for the most current information.

2027 E-350 Cutaway Chassis 176" WB DRW Base (E3F)

Price Level: 720 | Quote ID: 26AR301-

Available Options (cont'd)

Selected	Code	Description	MSRP
	Required on orders not destined for ambulance use.		
☐	981	Gaseous Engine Prep Package *Includes hardened engine intake valves, exhaust valves and valve seats. This package does not include CNG fuel tanks, lines, etc. Vehicle will be equipped with the standard factory gasoline fuel system. Additional equipment combined with a certified calibration reflash is required, from an external upfitter, to convert the vehicle to a CNG fueled vehicle. Ford Motor Company does not provide an exhaust or evaporative emissions certificate with this option when converted to use CNG fuel. Ford does not represent that a vehicle converted to use CNG or propane will comply with all applicable U.S. or Canadian safety standards. It is the responsibility of the final stage manufacturer (body-builder, installer, alterer or subsequent stage manufacturer) to determine that any vehicle converted to use CNG complies with U.S. Federal, California, or Canadian exhaust and evaporative emission requirements, federal fuel economy standards, U.S. and Canadian safety standards, labeling, and any other requirements.*	$365.00
☐	18A	High Series Exterior Upgrade Package *Includes:* *- Front Chrome Bumper* *- Chrome Grille*	$100.00
☐	18C	Interior Upgrade Package *Includes:* *- High-Series Door-Trim Panels*	Variable
☐	47R	Motorhome Prep Package - Option Discount *Reference RV and Trailer Towing Guide for maximum trailer weights and GAWRs.* *Includes:* *- Cloth Sun Visors* *- High Series Exterior Upgrade Package* *- Front Chrome Bumper* *- Chrome Grille* *- Power Equipment Group* *Includes 1-touch down power driver window.* *- Remote Keyless Entry* *- 110V Power Inverter* *- SecuriLock Passive Anti-Theft System (ePATS)* *- Seats Not Included (Manual Pedestals)* *Includes 2-way adjuster. Provides manual pedestal, pretensioning restraint system and unique seat tracks for driver side only. Temporary driver seat provided.* *- Cruise Control* *- Fixed Antenna* *- License Plate Bracket* *- Trailer Towing Package (Class I)* *- Exterior Mirror Delete* *- Front Headliner Delete* *- Front Dome Lamp Delete*	$1,385.00 -$1,250.00
☐	47B	Shuttle Bus Prep Package - Option Discount	$595.00 -$460.00

Prices and content availability as shown are subject to change and should be treated as estimates only. Actual base vehicle, package and option pricing may vary from this estimate because of special local pricing, availability or pricing adjustments not reflected in the dealer's computer system. See salesperson for the most current information.

2027 E-350 Cutaway Chassis 176" WB DRW Base (E3F)

Price Level: 720 | Quote ID: 26AR301-

Available Options (cont'd)

Selected	Code	Description	MSRP
		Includes: *- High Series Exterior Upgrade Package* *- Front Chrome Bumper* *- Chrome Grille* *- Seats Not Included (Manual Pedestals)* *Includes 2-way adjuster. Provides manual pedestal, pretensioning restraint system and unique seat tracks for driver side only. Temporary driver seat provided.* *- Engine Block Heater* *Single element. Recommended when minimum temperature is 10 degrees fahrenheit or below.* *- Frame Pucks (Isolators)* *Includes 12 body mounts.* *- License Plate Bracket* *- Front Headliner Delete* *- Front Dome Lamp Delete*	
☐	534	Trailer Towing Package (Class I)	$150.00
☐	79V	COV Required	N/A
☐	C09	Priced DORA	N/C

Fleet Options

☐	17B Requires valid FIN code.	Orange Safety Belt	$85.00
☐	86B Requires valid FIN code. *Includes driver's safety lock - locks in default settings for Driver's Safety Package (526). Cannot be turned off or modified by fleet administration or operators. Provides: settings cannot be changed by driver or fleet admin, driver alert set - on, collision assist - alert sensitivity set - norm, distance ind set - on, active brake set - on, pre collision warn set - on, lane keep-system default - on, sensitivity set to norm, lighting auto delay set - 20 seconds, auto highbeam set - on and day lights set - on pos.*	Driver Assistance - Fleet Settings	$35.00
☐	57J Requires valid FIN code. *Includes rear fan controls.*	Auxiliary Heater Connection Package	$65.00
☐	942 Requires valid FIN code.	Non-Configurable Daytime Running Lamps	$25.00

Prices and content availability as shown are subject to change and should be treated as estimates only. Actual base vehicle, package and option pricing may vary from this estimate because of special local pricing, availability or pricing adjustments not reflected in the dealer's computer system. See salesperson for the most current information.

2027 E-350 Cutaway Chassis 176" WB DRW Base (E3F)

Price Level: 720 | Quote ID: 26AR301-

Available Options (cont'd)

Selected	Code	Description	MSRP
☐	672 Requires valid FIN code.	Maximum Front GAWR: 5000 lbs.	$40.00
☐	916 Requires valid FIN code.	Speed Limitation - 65 MPH Governed Top Speed	$80.00
☐	917 Requires valid FIN code.	Speed Limitation - 75 MPH Governed Top Speed	$80.00
☐	41X Requires valid FIN code.	Engine Console Cover Delete	-$20.00
☐	D9D	Built: Ohio Plant	N/C
☐	31P	Ship-Thru: Midway Specialty Vehicles Inc	$0.00
☐	31H	Ship-Thru: Knapheide	$0.00
☐	31J	Ship-Thru: Auto Truck	$0.00
☐	31L Required on orders that contain Ford Work Solutions options.	Ship-Thru: Reading Equipment & Distribution	$0.00
☐	31M	Ship-Thru: Monroe Truck Equipment - Flint	$0.00
☐	31X	Ship-Thru: Monroe Truck Equipment	$0.00

Prices and content availability as shown are subject to change and should be treated as estimates only. Actual base vehicle, package and option pricing may vary from this estimate because of special local pricing, availability or pricing adjustments not reflected in the dealer's computer system. See salesperson for the most current information.

2027 E-350 Cutaway Chassis 176" WB DRW Base (E3F)

Price Level: 720 | Quote ID: 26AR301-

Available Options (cont'd)

Selected	Code	Description	MSRP
☐	31S	Ship-Thru: Roush CleanTech	$0.00
☐	31W	Ship-Thru: Reading Equipment	$0.00
☐	31F	Ship-Thru: National Fleet Services	$0.00
☑	FLADCR	Fleet Advertising Credit	$0.00
☑	WARANT	Fleet Customer Powertrain Limited Warranty	N/C

Requires valid FIN code.

Ford is increasing the 5-year 60,000-mile limited powertrain warranty to 5-years, 100,000 miles. Only Fleet purchasers with a valid Fleet Identification Number (FIN code) will receive the extended warranty. When the sale is entered into the sales reporting system with a sales type fleet along with a valid FIN code, the warranty extension will automatically be added to the vehicle. The extension will stay with the vehicle even if it is subsequently sold to a non-fleet customer before the expiration. This extension applies to both gas and diesel powertrains. Dealers can check for the warranty extension on eligible fleet vehicles in OASIS. Please refer to the Warranty and Policy Manual section 3.13.00 Gas Engine Commercial Warranty. This change will also be reflected in the printed Warranty Guided distributed with the purchase of every new vehicle.

☐	FINAL1	Fleet Final Order Date: TBD	N/C
☐	T66	Tires: LT225/75R16E BSW A/S (Fleet)	$510.00

Valid FIN code required.

Michelin Agilis CrossClimate tire.

VSO Options

☐	VGV	1 Fuel Cap FLL TRN THRD	$75.00

Minimum order quantity: 1.

This option releases a fuel cap with a steel tether for E series cutaways.

☐	VGY	Vinyl Seats For Motorhome Prep Package	$278.00

Minimum order quantity: 1.

This option releases vinyl seats with motorhome prep package 47R.

Prices and content availability as shown are subject to change and should be treated as estimates only. Actual base vehicle, package and option pricing may vary from this estimate because of special local pricing, availability or pricing adjustments not reflected in the dealer's computer system. See salesperson for the most current information.

2027 E-350 Cutaway Chassis 176" WB DRW Base (E3F)

Price Level: 720 | Quote ID: 26AR301-

Available Options (cont'd)

Selected	Code	Description	MSRP
General Info			
☐	ORDER1	Initial Order Date: 10/15/2025	N/C
☐	START1	Start-Up Date: 01/05/2026	N/C
☐	BUILD1	Build-Out Date: TBD	N/C

Prices and content availability as shown are subject to change and should be treated as estimates only. Actual base vehicle, package and option pricing may vary from this estimate because of special local pricing, availability or pricing adjustments not reflected in the dealer's computer system. See salesperson for the most current information.

2027 E-350 Cutaway Chassis 176" WB DRW Base (E3F)

Price Level: 720 | Quote ID: 26AR301-

Selected Equip & Specs

Dimensions

- Conventional Capacity: 6,000 lbs.
- GCWR: 18,500 lbs.
- Front brake diameter: 13.6"
- Rear brake diameter: 13.6"
- Vehicle body length: 261.1"
- Vehicle body width: 79.4"
- Vehicle body height: 80.1"
- Wheelbase: 176.0"
- Vehicle turning radius: 30.2'
- Front track: 69.4"
- Rear track: 75.4"
- Cab to axle: 118.0"
- Axle to end of frame: 68.5"
- Frame section modulus: 5.7 cu.in.
- Frame yield strength (psi): 36000.0
- Front bumper to back of cab: 92.5"
- Headroom first-row: 42.0"
- Leg room first-row: 42.1"
- Shoulder room first-row: 68.1"
- Hip room first-row: 65.6"

Powertrain

- Spark ignition system
- 7.3L V-8 variable valve control, engine with 325HP
- Engine cylinders: V-8
- Injection Type: sequential MPI
- Horsepower: 325 HP@3750 RPM
- Torque: 450 lb.-ft.@3750 RPM
- Radiator
- 6-speed automatic
- Rear-wheel drive
- Recommended fuel: regular unleaded
- All-speed ABS and driveline traction control

Fuel Economy and Emissions

- Gasoline secondary fuel type
- Federal emissions

Suspension and Handling

- Standard ride suspension
- Heavy-duty front shock absorbers
- Heavy-duty rear shock absorbers

Driveability

- 4-wheel disc brakes
- Front ventilated disc brakes
- 4-wheel antilock (ABS) brakes
- Three channel ABS brakes
- Hill start assist
- Independent front suspension
- Front anti-roll bar
- Front coil springs
- Rigid axle rear suspension
- Rear anti-roll bar
- Leaf spring rear suspension
- Hydraulic power-assist steering system
- Re-circulating ball steering
- 2-wheel steering system

Body Exterior

- 2 doors
- Monotone paint
- Black side window trim
- Black door handles
- Black windshield trim
- Black front bumper
- Black front bumper rub strip
- Black grille

Prices and content availability as shown are subject to change and should be treated as estimates only. Actual base vehicle, package and option pricing may vary from this estimate because of special local pricing, availability or pricing adjustments not reflected in the dealer's computer system. See salesperson for the most current information.

2027 E-350 Cutaway Chassis 176" WB DRW Base (E3F)

Price Level: 720 | Quote ID: 26AR301-

Selected Equip & Specs (cont'd)

* **Convex spotter in driver and passenger side door mirrors**
* **Black door mirrors**
* 16 x 6-inch front and dual rear painted steel wheels
* **Manual extendable trailer mirrors**
* LT225/75RS16 AS BSW front and rear tires

Convenience

* **Power door locks with 2 stage unlocking**
* **Cruise control with steering wheel mounted controls**
* Partial floor console
* Standard glove box
* Driver and passenger door bins
* **Retained accessory power**
* **Keyfob activated door locks**
* **Power first-row windows**
* Front beverage holders
* 2 beverage holders
* Front under seat tray
* PRND in IP

Comfort

* Manual climate control
* Front headliner coverage
* Front floor coverage
* Manual tilting steering wheel
* Vinyl headliner material
* Front vinyl floor covering
* Urethane steering wheel
* Manual telescopic steering wheel

Seats and Trim

* Seating capacity: 2
* Driver seat with 4-way directional controls
* Fixed front seat head restraints
* Front passenger seat armrest
* Manual driver seat fore/aft control
* Manual passenger seat fore/aft control
* Bucket front seats
* Front passenger seat with 4-way directional controls
* Driver seat armrest
* Manual reclining driver seat
* Manual reclining passenger seat
* Vinyl front seat upholstery

Entertainment Features

* AM/FM stereo radio
* In-vehicle audio
* FM radio
* External memory control
* Speakers number: 2
* Fixed audio antenna
* AM/FM
* AM radio
* Seek scan
* Standard grade speakers
* Wireless audio streaming

Lighting, Visibility and Instrumentation

* Analog instrumentation display
* Digital clock
* Oil pressure gauge
* Voltmeter
* Trip odometer
* Driver information center
* Engine/electric motor temperature gauge
* Light tinted windows

Prices and content availability as shown are subject to change and should be treated as estimates only. Actual base vehicle, package and option pricing may vary from this estimate because of special local pricing, availability or pricing adjustments not reflected in the dealer's computer system. See salesperson for the most current information.

2027 E-350 Cutaway Chassis 176" WB DRW Base (E3F)

Price Level: 720 | Quote ID: 26AR301-

Selected Equip & Specs (cont'd)

- Reflector headlights
- Auto on/off headlight control
- DRL preference setting
- Sun visor strip
- Variable instrument panel light
- Halogen headlights
- Multiple enclosed headlights
- Variable intermittent front windshield wipers
- * **Illuminated entry**
- Daytime running lights

Technology and Telematics

- Handsfree wireless device connectivity
- 2 USB ports
- Mobile app access

Safety and Security

- Driver front impact airbag
- 2 airbags
- Front seatbelt pretensioners
- * **Immobilizer**
- * **Remote panic alarm**
- Electronic stability control system
- Passenger front impact airbag
- Front height adjustable seatbelts
- 2 seatbelt pre-tensioners
- Vehicle tracker
- Forward collision mitigation

Dimensions

General Weights

* **Curb weight**	**5,278 lbs.**	* **Rear curb weight**	**2,120 lbs.**
GVWR	12,500 lbs.	Payload	7,200 lbs.

Trailering Weights

Conventional capacity	6,000 lbs.	GCWR	18,500 lbs.

Front Weights

* **Front curb weight**	**3,158 lbs.**	GAWR front	4,200 lbs.
Axle capacity front	5,000 lbs.	Spring rating front	4,200 lbs.
Tire/wheel capacity front	5,000 lbs.		

Rear Weights

GAWR rear	8,500 lbs.	Axle capacity rear	8,500 lbs.
Spring rating rear	8,500 lbs.	Tire/wheel capacity rear	9,880 lbs.

Off Road

Loading floor height	26.2 "

Exterior Measurements

Vehicle body length	261.1"	Vehicle body width	79.4"
Vehicle body height	80.1"	Wheelbase	176.0"
Front brake diameter	13.6"	Rear brake diameter	13.6"
Rear frame height loaded	26.2"	Front track	69.4"

Prices and content availability as shown are subject to change and should be treated as estimates only. Actual base vehicle, package and option pricing may vary from this estimate because of special local pricing, availability or pricing adjustments not reflected in the dealer's computer system. See salesperson for the most current information.

2027 E-350 Cutaway Chassis 176" WB DRW Base (E3F)

Price Level: 720 | Quote ID: 26AR301-

Selected Equip & Specs (cont'd)

Rear track	75.4"
Cab to axle	118.0"
Frame section modulus	5.7 cu.in.
Front bumper to back of cab	92.5"
Vehicle turning radius	30.2'
Axle to end of frame	68.5"
Frame yield strength (psi)	36000.0

Headroom

Headroom first-row	42.0"

Legroom

Leg room first-row	42.1"

Shoulder Room

Shoulder room first-row	68.1"

Hip Room

Hip room first-row	65.6"

Powertrain

Engine

Engine	7.3L V-8 variable valve control, engine with 325HP
Engine cylinders	V-8
Engine location	Front mounted engine
Engine mounting direction	Longitudinal mounted engine
Cylinder head material	Aluminum cylinder head
Valves per cylinder	2
Injection type	sequential MPI
Ignition	Spark ignition system
Engine block material	Iron engine block

Engine Specs

Displacement	7.3L
Bore	4.21"
Compression ratio	10.5
cc	445 cu.in.
Stroke	3.98"
SAEJ1349	AUG2004 compliant

Engine Power

Horsepower	325 HP@3750 RPM
Torque	450 lb.-ft.@3750 RPM

Alternator

Alternator amps	210A
Alternator type	Heavy-duty alternator

Battery

Battery amps	78Ah
Battery rating	750CCA
Battery type	HD lead acid battery

Engine Extras

Radiator	Radiator

Transmission

Prices and content availability as shown are subject to change and should be treated as estimates only. Actual base vehicle, package and option pricing may vary from this estimate because of special local pricing, availability or pricing adjustments not reflected in the dealer's computer system. See salesperson for the most current information.

2027 E-350 Cutaway Chassis 176" WB DRW Base (E3F)

Price Level: 720 | Quote ID: 26AR301-

Selected Equip & Specs (cont'd)

Transmission ..... 6-speed automatic
Transmission electronic control ..... Transmission electronic control
Overdrive transmission ..... Overdrive transmission
Lock-up transmission ..... Lock-up transmission
First gear ratio 3.974
Second gear ratio 2.318
Third gear ratio 1.516
Fourth gear ratio 1.149
Fifth gear ratio 0.858
Sixth gear ratio 0.674
Reverse gear ratio 3.128
Stall ratio 1.9
Selectable mode transmission ..... Selectable mode transmission
Transmission oil cooler ..... Transmission oil cooler

Drive Type

Drive type ..... Rear-wheel drive

Drivetrain

* **Axle ratio 4.56**

Exhaust

Tailpipe ..... Stainless steel single exhaust

Fuel

Fuel type ..... regular unleaded

Fuel Tank

Fuel tank capacity ..... 40.00 gal.

Drive Feature

Traction control ..... All-speed ABS and driveline traction control

Fuel Economy and Emissions

Fuel Economy

Secondary fuel type ..... Gasoline secondary fuel type

Emissions

Emissions ..... Federal emissions
Emissions tiers ..... Tier 2 Bin 8 emissions

Suspension and Handling

Suspension

Suspension ..... Standard ride suspension
Front shock absorbers ..... Heavy-duty front shock absorbers
Rear shock absorbers ..... Heavy-duty rear shock absorbers

Driveability

Prices and content availability as shown are subject to change and should be treated as estimates only. Actual base vehicle, package and option pricing may vary from this estimate because of special local pricing, availability or pricing adjustments not reflected in the dealer's computer system. See salesperson for the most current information.

2027 E-350 Cutaway Chassis 176" WB DRW Base (E3F)

Price Level: 720 | Quote ID: 26AR301-

Selected Equip & Specs (cont'd)

Brakes

Brake type	4-wheel disc brakes	Ventilated brakes	Front ventilated disc brakes
ABS brakes	Three channel ABS brakes	ABS brakes	4-wheel antilock (ABS) brakes

Brake Assistance

Hill start assist	Hill start assist

Front Suspension

Front anti-roll	Front anti-roll bar	Suspension ride type front suspension	Independent front

Front Spring

Regular front springs	Regular front springs	Springs front	Front coil springs

Rear Spring

Springs rear	Rear leaf springs	Rear springs	Regular grade rear springs

Rear Suspension

Rear anti-roll	Rear anti-roll bar	Suspension type rear	Leaf spring rear suspension
Suspension ride type rear	Rigid axle rear suspension		

Steering

Steering	Hydraulic power-assist steering system	Steering type	Re-circulating ball steering
Steering type number of wheels	2-wheel steering system		

Exterior

Front Wheels

Front wheels diameter	16"	Front wheels width	6"

Rear Wheels

Rear wheels diameter	16"	Rear wheels width	6"

Front And Rear Wheels

Appearance	painted	Material	steel

Front Tires

Aspect	75	Diameter	16"
Sidewalls	BSW	Speed	S
Tread	AS	Type	LT
Width	225mm	Front wheel - RPM	709

Rear Tires

Aspect	75	Diameter	16"
Sidewalls	BSW	Speed	S
Tread	AS	Type	LT

Prices and content availability as shown are subject to change and should be treated as estimates only. Actual base vehicle, package and option pricing may vary from this estimate because of special local pricing, availability or pricing adjustments not reflected in the dealer's computer system. See salesperson for the most current information.

2027 E-350 Cutaway Chassis 176" WB DRW Base (E3F)

Price Level: 720 | Quote ID: 26AR301-

Selected Equip & Specs (cont'd)

Width 225mm
Rear wheel - RPM 709

Body Exterior

Exterior Features

Number of doors ..... 2 doors
* **License plate front bracket** ..... **Front license plate bracket**

Body

Body panels ..... Fully galvanized steel body panels with side impact beams

Mirrors

* **Convex spotter** ..... **Convex spotter in driver and passenger side door mirrors**

Tires

Front tires LT load rating ..... E
Rear tires LT load rating ..... E

Wheels

Dual rear wheels ..... Dual rear wheels

Convenience

Door Locks

* **Door locks** ..... **Power door locks with 2 stage unlocking**
* **Keyfob door locks** ..... **Keyfob activated door locks**

Cruise Control

* **Cruise control** ..... **Cruise control with steering wheel mounted controls**

Exterior Mirrors

* **Door mirrors** ..... **Power door mirrors**
* **Folding door mirrors** ..... **Manual folding door mirrors**

Front Side Windows

* **First-row windows** ..... **Power first-row windows**

Floor Console

Floor console ..... Partial floor console
Floor console storage ..... Floor console storage

Power Outlets

12V power outlets ..... 2 12V power outlets
* **120V AC power outlets** ..... **1 120V AC power outlet**

Storage

Door bins front ..... Driver and passenger door bins
Beverage holders ..... Front beverage holders
Number of beverage holders ..... 2 beverage holders
Glove box ..... Standard glove box

Prices and content availability as shown are subject to change and should be treated as estimates only. Actual base vehicle, package and option pricing may vary from this estimate because of special local pricing, availability or pricing adjustments not reflected in the dealer's computer system. See salesperson for the most current information.

2027 E-350 Cutaway Chassis 176" WB DRW Base (E3F)

Price Level: 720 | Quote ID: 26AR301-

Selected Equip & Specs (cont'd)

Under seat tray front ..... Front under seat tray

Windows Feature

* **One-touch down window** .. **Driver one-touch down window**

Miscellaneous

PRND in IP ..... PRND in IP

* **Accessory power** ..... **Retained accessory power**

Comfort

Climate Control

Climate control ..... Manual climate control

Headliner

Headliner material ..... Vinyl headliner material

Headliner coverage ..... Front headliner coverage

Floor Trim

Floor covering ..... Front vinyl floor covering

Floor coverage ..... Front floor coverage

Steering Wheel

Steering wheel material ..... Urethane steering wheel

Steering wheel telescopic . Manual telescopic steering wheel

Steering wheel tilt ..... Manual tilting steering wheel

Seats and Trim

Seat Capacity

Seating capacity 2

Front Seats

Driver seat direction Driver seat with 4-way directional controls

Driver seat fore/aft control . Manual driver seat fore/aft control

Passenger seat direction Front passenger seat with 4-way directional controls

Split front seats ..... Bucket front seats

Reclining passenger seat Manual reclining passenger seat

Passenger seat fore/aft control .... Manual passenger seat fore/aft control

Front head restraints . Fixed front seat head restraints

Armrests front driver ..... Driver seat armrest

Armrests front passenger ..... Front passenger seat armrest

Reclining driver seat ..... Manual reclining driver seat

Front Seat Trim

Front seat upholstery ..... Vinyl front seat upholstery

Front seatback upholstery ..... Vinyl front seatback upholstery

Gearshifter Material

Gearshifter material .... Urethane gear shifter material

Prices and content availability as shown are subject to change and should be treated as estimates only. Actual base vehicle, package and option pricing may vary from this estimate because of special local pricing, availability or pricing adjustments not reflected in the dealer's computer system. See salesperson for the most current information.

2027 E-350 Cutaway Chassis 176" WB DRW Base (E3F)

Price Level: 720 | Quote ID: 26AR301-

Selected Equip & Specs (cont'd)

Entertainment Features

Radio Features

External memory ..... External memory control
Seek scan ..... Seek scan

Speakers

Speakers ..... Standard grade speakers
Speakers number 2

Audio Features

Wireless streaming ..... Wireless audio streaming

Lighting, Visibility and Instrumentation

Instrumentation

Trip odometer ..... Trip odometer
Instrumentation display ..... Analog instrumentation display

Instrumentation Displays

Driver information center ..... Driver information center
Clock ..... Digital clock

Instrumentation Gauges

Oil pressure gauge ..... Oil pressure gauge
Voltmeter ..... Voltmeter
Engine/electric motor temperature gauge ..... Engine/electric motor temperature gauge

Instrumentation Warnings

Engine temperature warning ..... Engine temperature warning
Oil pressure warning ..... Oil pressure warning
Low fuel warning ..... Low fuel warning
Battery charge warning ..... Battery charge warning
Headlights on reminder ..... Headlights on reminder
Key in vehicle warning ..... Key in vehicle warning
Service interval warning ..... Service interval indicator
Low tire pressure warning ..... Low tire pressure warning

Glass

Tinted windows ..... Light tinted windows

Headlights

Headlights ..... Halogen headlights
Headlight type ..... Reflector headlights
Auto headlights ..... Auto on/off headlight control
Multiple headlights ..... Multiple enclosed headlights
DRL preference setting ..... DRL preference setting

Front Windshield

Wipers ..... Variable intermittent front windshield wipers
Sun visor strip ..... Sun visor strip

Interior Lighting

* **Illuminated entry** ..... **Illuminated entry**
Variable panel light ..... Variable instrument panel light

Lights

Prices and content availability as shown are subject to change and should be treated as estimates only. Actual base vehicle, package and option pricing may vary from this estimate because of special local pricing, availability or pricing adjustments not reflected in the dealer's computer system. See salesperson for the most current information.

2027 E-350 Cutaway Chassis 176" WB DRW Base (E3F)

Price Level: 720 | Quote ID: 26AR301-

Selected Equip & Specs (cont'd)

Running lights ..... Daytime running lights

Technology and Telematics

Connectivity

Handsfree ..... Handsfree wireless device connectivity

USB Ports

USB ports ..... 2 USB ports

Safety and Security

Airbags

Front impact airbag driver ... Driver front impact airbag
Front impact airbag passenger ..... Passenger front impact airbag
Number of airbags ..... 2 airbags

Seatbelts

Height adjustable seatbelts .... Front height adjustable seatbelts
Seatbelt pretensioners number ..... 2 seatbelt pre-tensioners
Seatbelt pretensioners ... Front seatbelt pretensioners

Security System

* **Immobilizer** ..... **Immobilizer**
* **Remote panic alarm** ..... **Remote panic alarm**

Vehicle tracker ..... Vehicle tracker

Active Driving Assistance

Forward collision warning . Forward collision mitigation

Traction Control

Electronic stability control ... Electronic stability control system

Prices and content availability as shown are subject to change and should be treated as estimates only. Actual base vehicle, package and option pricing may vary from this estimate because of special local pricing, availability or pricing adjustments not reflected in the dealer's computer system. See salesperson for the most current information.

2027 E-350 Cutaway Chassis 176" WB DRW Base (E3F)

Price Level: 720 | Quote ID: 26AR301-

Vehicle Dimension and Performance Summary

Performance predictions in this report represent an estimate of vehicle performance based on standard operating conditions. Variations in customer equipment, load configuration, ambient conditions, and/or operator driving techniques can cause significant variations in vehicle performance. These values are not representative of results that may be shown in actual dynamometer tests. This report should therefore be used as a guide for comparative vehicle performance.

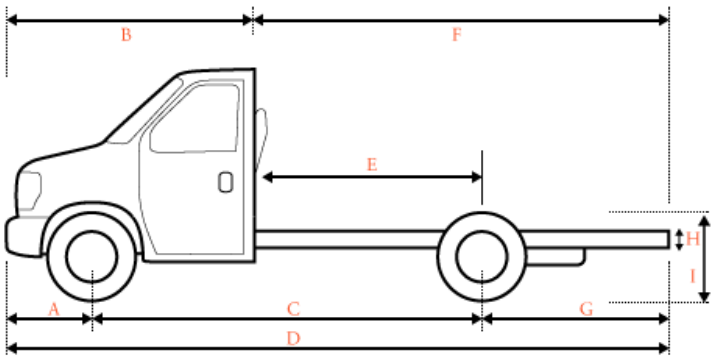

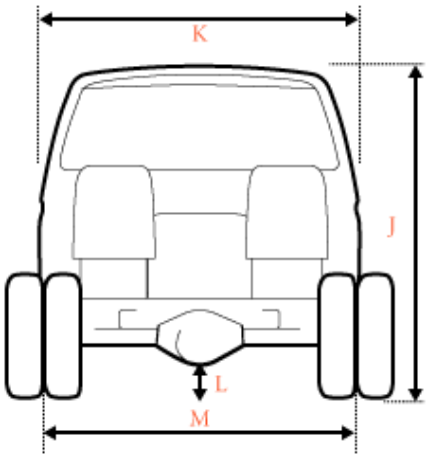

Dimensions

A	Front of Bumper to Front Axle	16.60 in.
B	Front Bumper to Back of Cab (BBC)	92.50 in.
C	Wheelbase (WB)	176.00 in.
D	Overall Length (OAL)	261.10 in.
E	Back of Cab to Rear Axle (CA)	118.00 in.
F	Back of Cab to End of Frame	168.50 in.
G	Rear Axle to End of Frame (AF)	68.50 in.
H	Frame Section Height	N/A
I	Rear Frame Height Unloaded	N/A
I	Rear Frame Height Loaded	26.20 in.
J	Cab Height	80.10 in.
K	Body Width	79.40 in.
L	Maximum Ground Clearance	N/A
L	Minimum Ground Clearance	N/A
M	Front Tread	69.40 in.
M	Rear Tread	75.40 in.

Prices and content availability as shown are subject to change and should be treated as estimates only. Actual base vehicle, package and option pricing may vary from this estimate because of special local pricing, availability or pricing adjustments not reflected in the dealer's computer system. See salesperson for the most current information.

2027 E-350 Cutaway Chassis 176" WB DRW Base (E3F)

Price Level: 720 | Quote ID: 26AR301-

Vehicle Dimension and Performance Summary (cont'd)

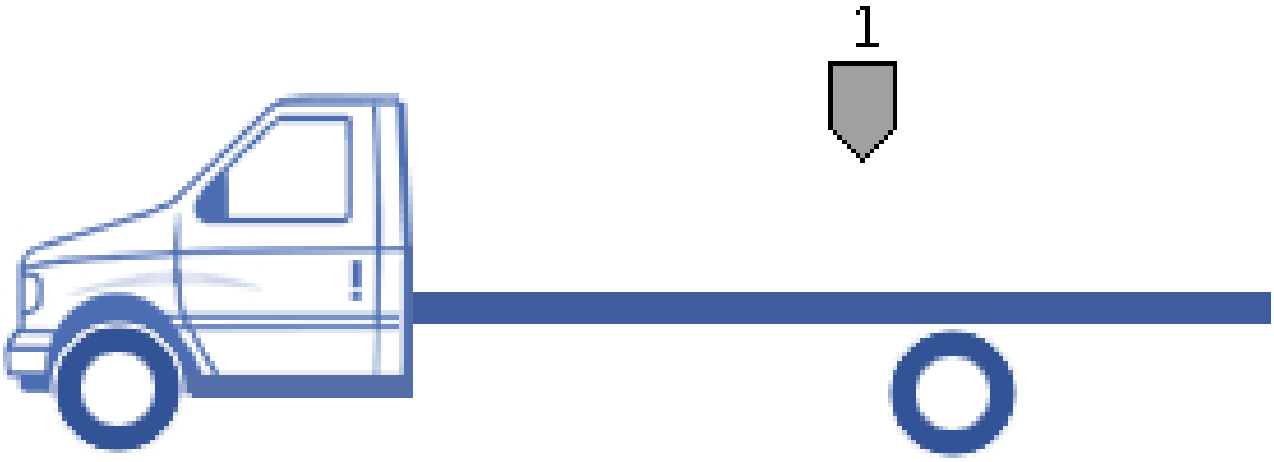

Weight

GVW	Front Axle	Rear Axle	Totals
Chassis	3,158 lbs	2,120 lbs	5,278 lbs
Body	0 lbs	0 lbs	0 lbs
Occupants Weight	200 lbs	100 lbs	300 lbs
1 Max Payload - (Max Payload)	842 lbs	6,280 lbs	7,122 lbs
TOTAL	**4,200 lbs**	**8,500 lbs**	**12,700 lbs**

Ratings	Front Axle	Rear Axle	GVWR
GAWR	**4,200 lbs**	**8,500 lbs**	**12,500 lbs**
Wheels/Tires	5,000 lbs	9,880 lbs	
Suspension	4,200 lbs	8,500 lbs	
Axle	5,000 lbs	8,500 lbs	
Legal Axle Limit	0 lbs	0 lbs	

Prices and content availability as shown are subject to change and should be treated as estimates only. Actual base vehicle, package and option pricing may vary from this estimate because of special local pricing, availability or pricing adjustments not reflected in the dealer's computer system. See salesperson for the most current information.

2027 E-350 Cutaway Chassis 176" WB DRW Base (E3F)

Price Level: 720 | Quote ID: 26AR301-

Vehicle Dimension and Performance Summary (cont'd)

Start, Grade and Speed

Start	Ratio	Desired	Calculated
Start grade capability in 1st gear	3.97	15.00 %	41.07 %
Start grade capability in reverse	3.13	15.00 %	32.32 %

Grade	Ratio	Desired	Calculated
Maximum grade in 4th gear	1.15	3.00 %	12.50 %
Maximum grade in 5th gear	0.86	3.00 %	9.33 %
Maximum grade in 6th gear	0.67	3.00 %	7.33 %

Speed	Desired	Calculated
Top Speed (level grade)	75 mph	103 mph
To meet your requirement you need a maximum axle ratio of 7.53		
Top Speed on 3% grade	55 mph	
To meet your requirement you need a maximum of 90 hp		
Cruise Speed	60 mph	72 mph
Engine RPM at desired cruise speed		2,179 rpm

Variables in Use

Start

Rear axle ratio:	4.56	Clutch engagement torque:	225 ft.lbs.
Tire size:	225/75R16 (709 rev/mile)	Torque conversion ratio:	1.90
Gross Vehicle Weight (GVW):	12,500 lbs		

Grade

Rear axle ratio:	4.56	Gross Vehicle Weight (GVW):	12,500 lbs
Tire size:	225/75R16 (709 rev/mile)	Peak engine torque:	450 ft.lbs.

Speed

Engine Power:	325 hp @ 3,750 rpm	Worst road surface	Typical Highway
Peak Torque RPM:	3,750 rpm	Final Drive Ratio:	0.67
Frontal Area:	39.20 ft²	Drag Coefficient	0.80
Cruising RPM	2,600 rpm		

Prices and content availability as shown are subject to change and should be treated as estimates only. Actual base vehicle, package and option pricing may vary from this estimate because of special local pricing, availability or pricing adjustments not reflected in the dealer's computer system. See salesperson for the most current information.

2027 E-350 Cutaway Chassis 176" WB DRW Base (E3F)

Price Level: 720 | Quote ID: 26AR301-

Vehicle Dimension and Performance Summary (cont'd)

Turning Radius

Turning Radius ..... 30.15 ft

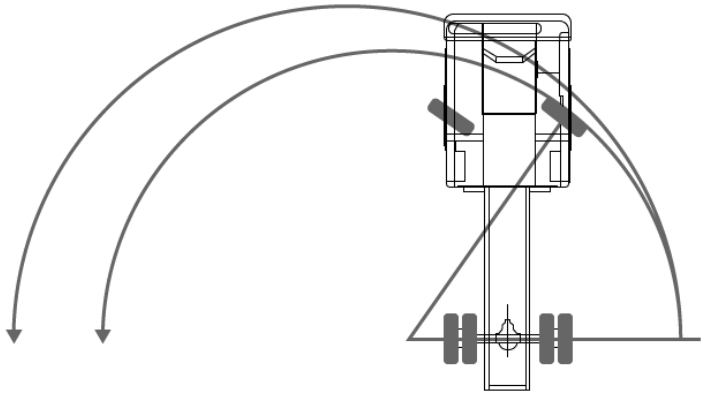

Prices and content availability as shown are subject to change and should be treated as estimates only. Actual base vehicle, package and option pricing may vary from this estimate because of special local pricing, availability or pricing adjustments not reflected in the dealer's computer system. See salesperson for the most current information.

2027 E-350 Cutaway Chassis 176" WB DRW Base (E3F)

Price Level: 720 | Quote ID: 26AR301-

Major Equipment

(Based on selected options, shown at right)
6-speed automatic

Exterior: Oxford White
Interior: Medium Flint w/Vinyl Bucket Seats

* 16 x 6-inch front and dual rear painted steel wheels
* LT225/75RS16 AS BSW front and rear tires
* Front tires LT load rating: E
* Overdrive transmission
* Lock-up transmission
* Transmission electronic control
* Alternator Amps: 210A
* Stainless steel single exhaust
* All-speed ABS and driveline traction control
* Battery rating: 750CCA
* HD lead acid battery
* Injection Type: sequential MPI
* Fuel tank capacity: 40.00 gal.
* Wireless audio streaming
* AM/FM stereo radio
* AM/FM
* Seek scan
* External memory control
* Vehicle body length: 261.1"
* Wheelbase: 176.0"
* Cab to axle: 118.0"
* Axle to end of frame: 68.5"
* Axle capacity rear: 8,500 lbs.
* Tire/wheel capacity rear: 9,880 lbs.
* Axle capacity front: 5,000 lbs.
* Spring rating front: 4,200 lbs.
* Standard ride suspension
* Power door mirrors
* Manual folding door mirrors
* DRL preference setting
* Daytime running lights
* Light tinted windows
* Variable intermittent front windshield wipers
* Sun visor strip
* Manual climate control
* Driver front impact airbag
* Passenger front impact airbag
* 2 airbags
* Electronic stability control system
* Immobilizer

As Configured Vehicle

	MSRP
STANDARD VEHICLE PRICE	$42,330.00
Order Code 780A	N/C
50 State Emission System	STD
Engine: 7.3L V8 Port Fuel Injected Gasoline	Included
Transmission: 6-Speed O/D w/Tow Haul	Included
GVWR: 12,500 Lb Payload Package	Included
Tires: LT225/75R16E BSW A/S	Included
Wheels: 16" X 6" White Painted Steel	Included
Dual High Back Buckets	Included
Vinyl Bucket Seats	Included
Monotone Paint Application	STD
176" Wheelbase	STD
Embedded Modem Delete	-$75.00
Radio: AM/FM Stereo w/Clock Display & 2 Speakers	Included
Ambulance Prep Package Not Required	N/C
Fleet Customer Powertrain Limited Warranty	N/C
Manual Telescoping Trailer Tow Mirrors (54E)	$230.00
Oxford White	N/C
Medium Flint w/Vinyl Bucket Seats	N/C

Prices and content availability as shown are subject to change and should be treated as estimates only. Actual base vehicle, package and option pricing may vary from this estimate because of special local pricing, availability or pricing adjustments not reflected in the dealer's computer system. See salesperson for the most current information.

Prepared by: Zach Perkovich
04/10/2026

Pritchard Auto Company | 980 Highway 18 East Britt Iowa | 504238700

2027 E-350 Cutaway Chassis 176" WB DRW Base (E3F)

Price Level: 720 | Quote ID: 26AR301-

Major Equipment

* Bucket front seats
* Front passenger seat with 4-way directional controls
* Driver seat armrest
* Manual reclining driver seat
* Manual reclining passenger seat
* Vinyl front seat upholstery
* 4-wheel disc brakes
* Hill start assist
* Driver seat with 4-way directional controls
* Fixed front seat head restraints
* Front passenger seat armrest
* Manual driver seat fore/aft control
* Manual passenger seat fore/aft control
* Vinyl front seatback upholstery
* 4-wheel antilock (ABS) brakes

Fuel Economy

City
N/A

Hwy
N/A

As Configured Vehicle

	MSRP
4.56 Axle Ratio	N/C
License Plate Bracket	N/C
Power Equipment Group	$615.00
Remote Keyless Entry	Included
110V Power Inverter	Included
SecuriLock Passive Anti-Theft System (ePATS)	Included
Cruise Control	$240.00
Fleet Advertising Credit	$0.00
SUBTOTAL	$43,340.00
Destination Charge	$2,195.00
TOTAL	**$45,535.00**

Prices and content availability as shown are subject to change and should be treated as estimates only. Actual base vehicle, package and option pricing may vary from this estimate because of special local pricing, availability or pricing adjustments not reflected in the dealer's computer system. See salesperson for the most current information.

2027 E-350 Cutaway Chassis 176" WB DRW Base (E3F)

Price Level: 720 | Quote ID: 26AR301-

Warranty

Standard Warranty

Basic Warranty

Basic warranty ..... 36 months/36,000 miles

Powertrain Warranty

Powertrain warranty ..... 60 months/60,000 miles

Corrosion Perforation

Corrosion perforation warranty ..... 60 months/unlimited

Roadside Assistance Warranty

Roadside warranty ..... 60 months/60,000 miles

Prices and content availability as shown are subject to change and should be treated as estimates only. Actual base vehicle, package and option pricing may vary from this estimate because of special local pricing, availability or pricing adjustments not reflected in the dealer's computer system. See salesperson for the most current information.